Mock project

Yostructor Application Brief

Youstructor

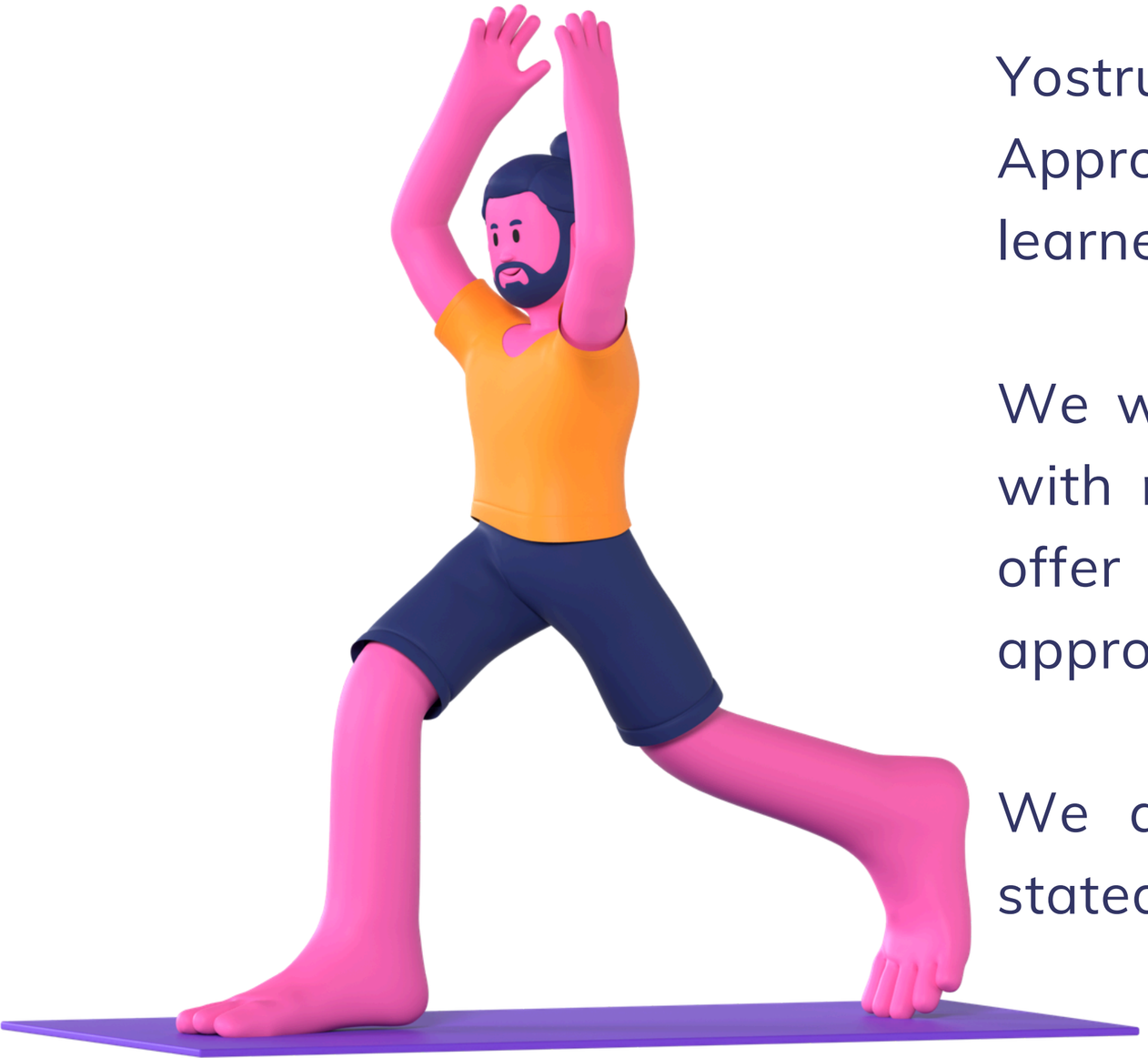

About Yostructor

Yostructor is a new business which connects Approved Yoga Instructors (AYIs) with yoga learners.

We will offer a way to reach more learners with reasonable cost for instructor, we also offer yoga learners an easy way to find approved yoga instructor (AYI) nearby.

We are currently have a website for the stated purposes.

Project Proposal

Instructors can register classes on our application to be displayed and selected by learners. Learners can use our current website to search and register for a yoga class.

Project Scope

We are looking for the creation of an application which will allow AYIs register and sell slots in their yoga classes.

It is expected to include:

- iOS and Android versions of the app.
- Sign-in and registration pages with a password reset function.
- A “My Account” section for the AYIs to be able to make changes (if possible) to their contact/bank details etc and view their class current status.
- See their level in the Yostructor and progress towards the next level.
- The ability to provide reference code to learners
- Manage classes’ information and availibity
- An information page/section which will provide information on the application including FAQs. Our data protection policy and Ts and Cs.
- A link to our Facebook group and the possibility for other social media.
- Separate buttons for the AYI which would allow them to call or email us.

The project is to complete an app with the above functionality to make the use of the Yostructor more efficient for AYIs, less wasteful and simpler so that it is more attractive for AYIs to use on the go.

I expect that this may cause an increase in the number of users on our service.

1. Elicit requirements & write BRD

After getting the project proposal, I spent time reading up on it and using Google Sheet to communicate with stakeholders to have their requirements clarified. (See details here)

I wrote a BRD after receiving responses from stakeholders and send it back to them via email in order to confirm the features that will be implemented during this phase. (See details here)

1.1. Elicit requirements (See details here)

A	B	C	D
No.	**Related points in proposal**	**Question**	**Answer**
1	We are looking for the creation of an application which will allow AYIs register and sell slots in their yoga classes	Will this app be used only by instructors? Will learners have accessibility to this app?	*Only Instructor*
2	Sign-in and registration pages with a password reset function.	- Register: What information will the user need to provide when registering? Will the user input it or it is automated (by entering ID card)? - Sign-in: + How many sign-in steps will it take? + If the user inputs the wrong password, what will happens? + If the user has already signed in once, do they have to sign in the next time using the app?	1. Register information - Full name (*) (Uppercase) - DOB (*) - Phone number (*) - Gender (*) - Email address (*) - ID number/Passport number (*) - Password (*) Rule for pw: + At least one lower case letter [a-z] + At least one upper case letter [A-Z] + At least one numeral [0-9] + Minimun 8 characters + Maximum 20 characters Banking information: - Bank name (*) - Bank Owner (*) - Bank account number (*) - Types of yoga (*)

1.2. Write BRD (See details here)

1. **Current business problem:**
   The current web-based platform lacks the mobility for Yoga Instructors (AYIs) to manage classes and "sell slots" in real-time while on the go. This leads to operational delays and makes it difficult for instructors to track their performance metrics and level progression.
2. **The proposed solution:**
   Develop a dedicated mobile application for Yoga Instructors to provide real-time class management, automated performance tracking and enhanced mobility.
3. **System(s) impacted:**
   A dedicated Yostructor Mobile App will be developed for iOS and Android, integrating with the existing Web Backend and Database to synchronize instructor profiles, class slots, and performance metrics.
4. **Assumptions/Dependencies:**

- Only Approved Yoga Instructors (AYIs) can access the app; students will continue using the website.
- The app requires real-time API integration with the existing Yostructor web database to ensure data consistency.

5. **Business requirements:**
   5.1 Profile & Authentication Management
   5.1.1 Ability for the user to register a new account
   5.1.2 Ability for the user to log in to the application
   5.1.3 Ability for the user to change account password
   5.1.4 Ability for the user to retrieve a forgotten password

2.1. BPMN: Register

After clarifying requirements with stakeholders, I used draw.io to draw bpmn diagram.

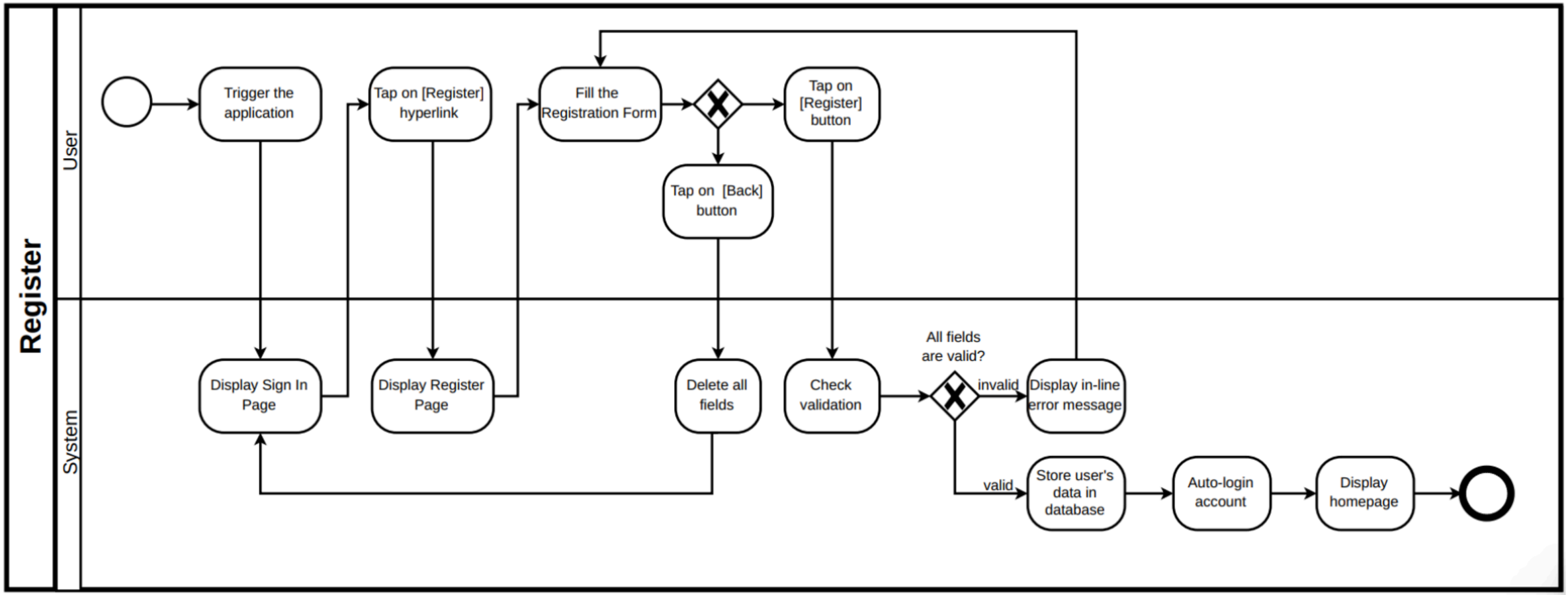

2.2. BPMN: Sign in

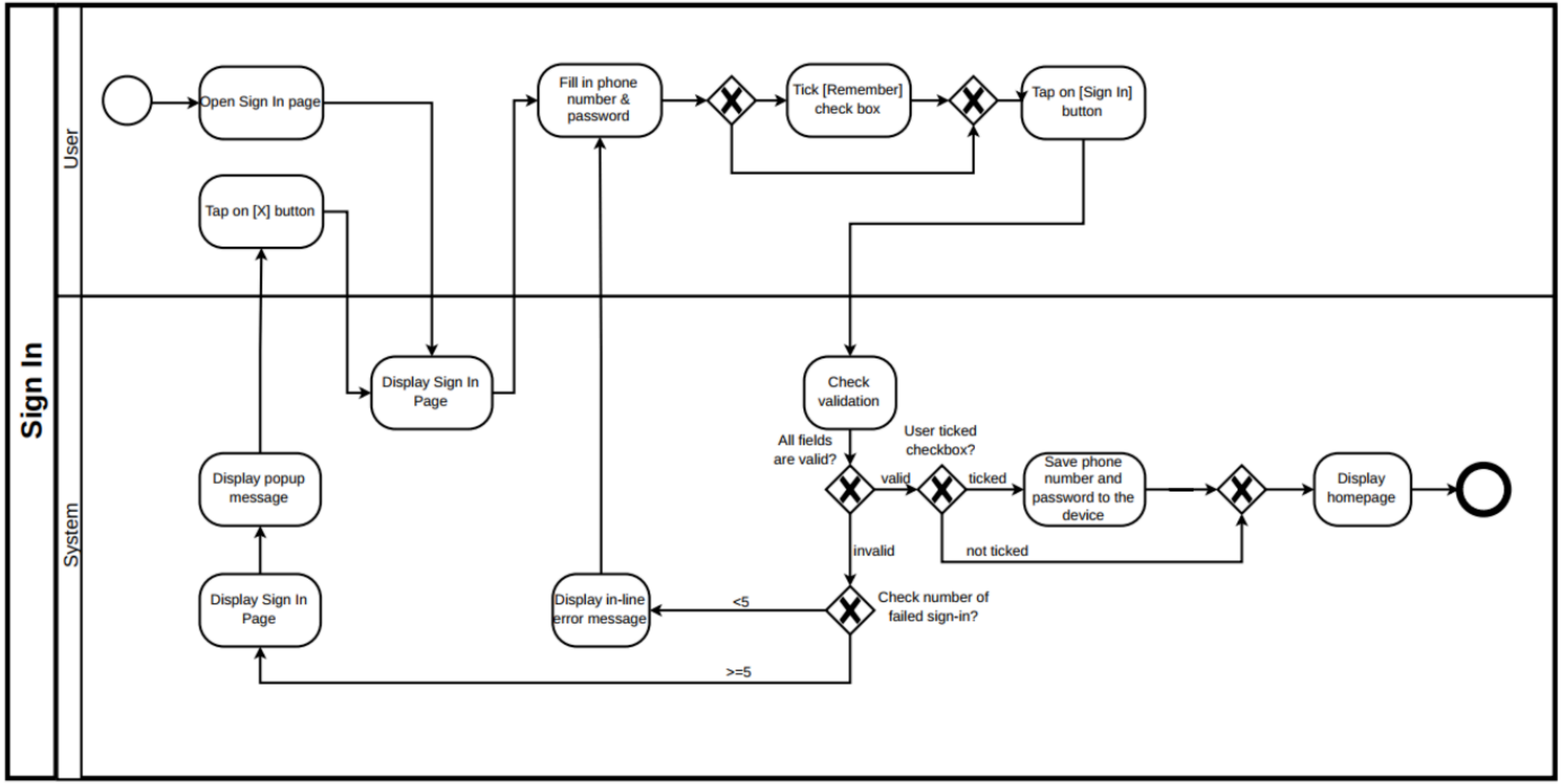

2.3. BPMN: Create new class

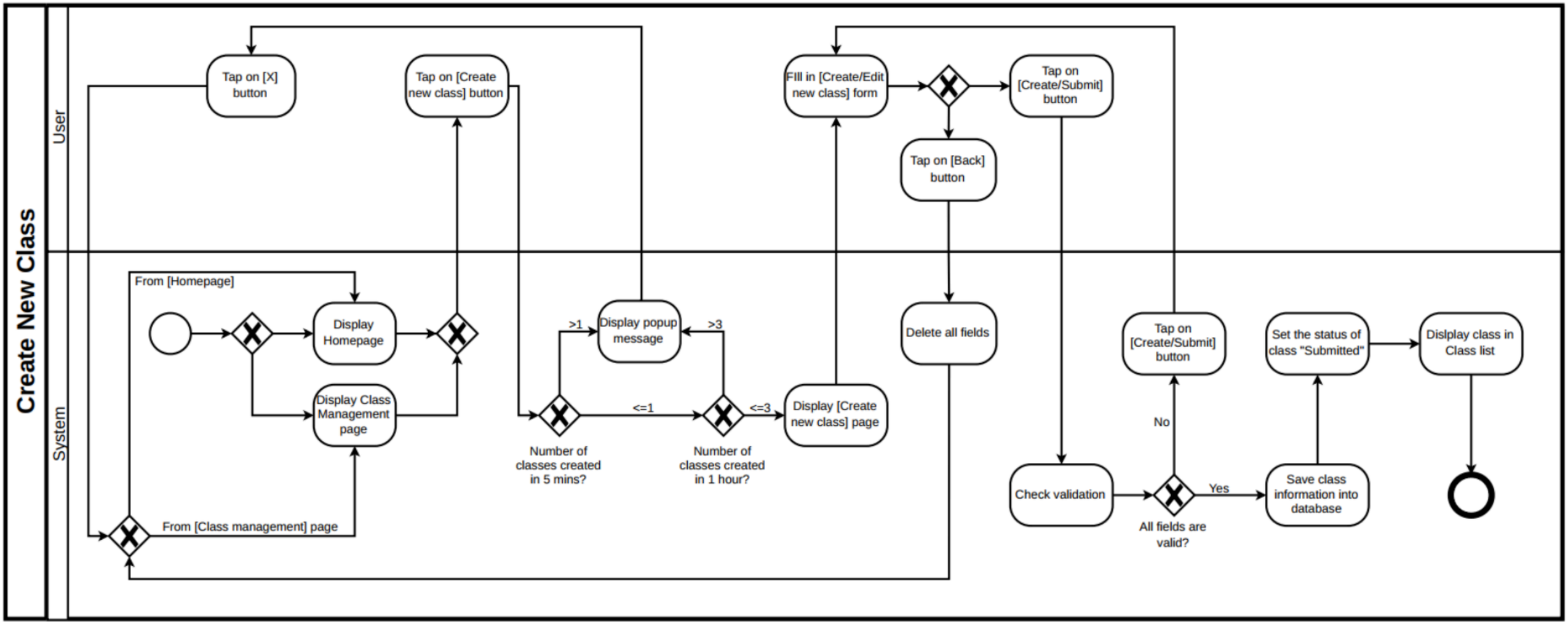

3. User story

User story include the following parts:

1. Acceptance criteria
2. Authorized user
3. Entry point
4. Exit point
5. Process flow
6. Fields and Validations and Verifications

📌 Please click here to see detailed user stories of 3 functions: Register, Sign in, Create new class

4. Sketch about Register, Sign-in, Create New Class (See details here)

I used **Figma** to build wireframes for these 3 functions

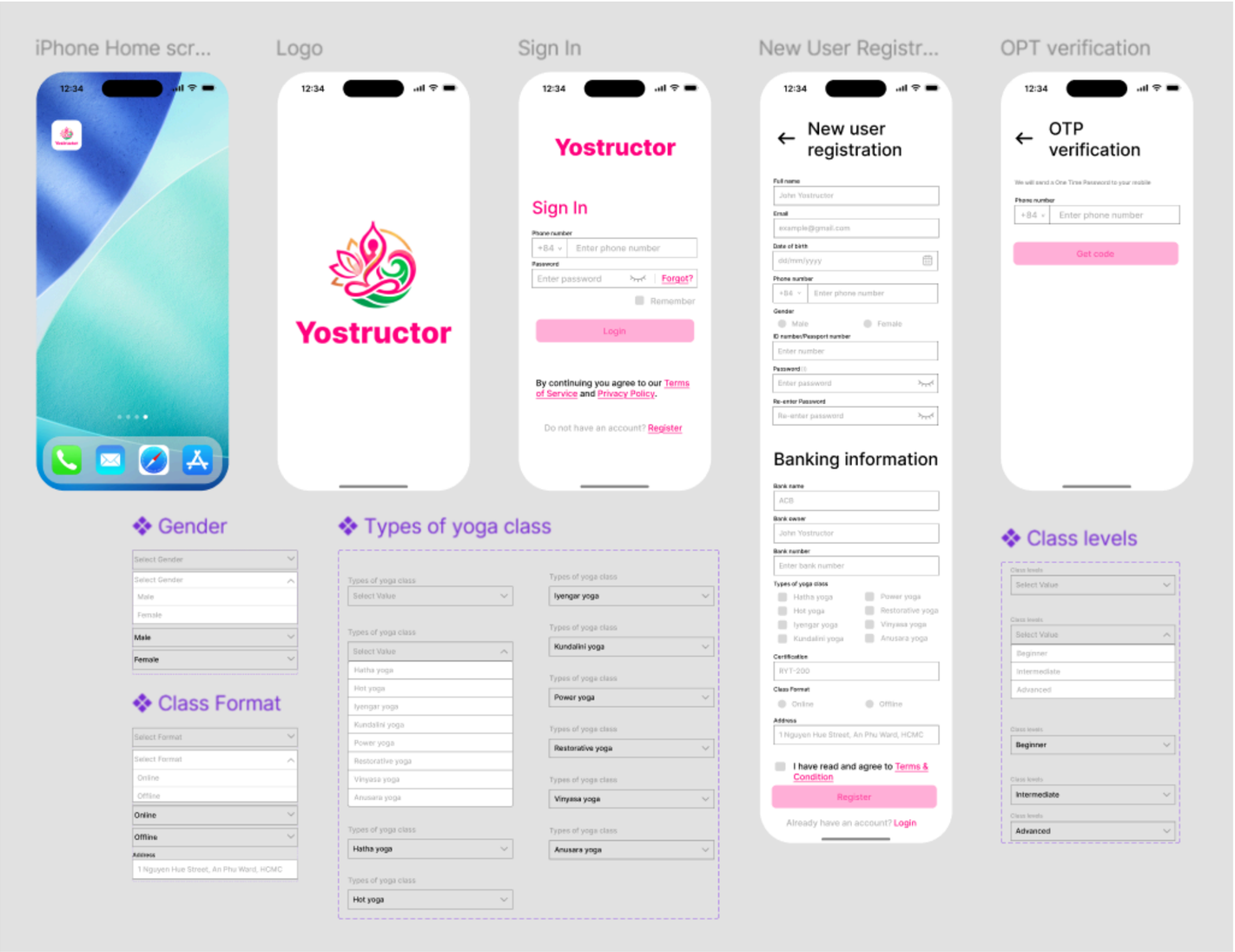

5. Mock up about Register, Sign-in, Create New Class (See details here)

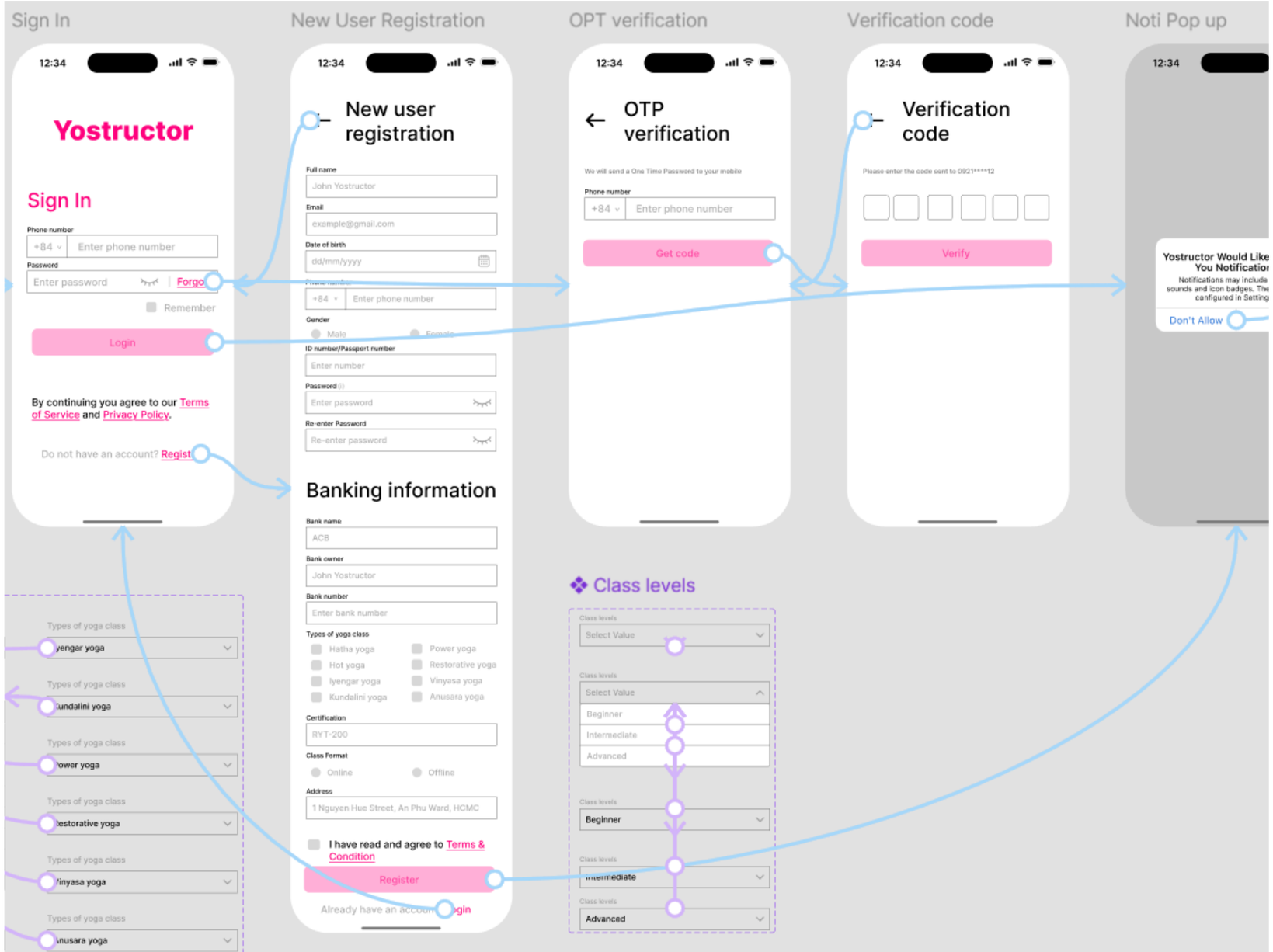

6. Use Case Diagram (See details here)

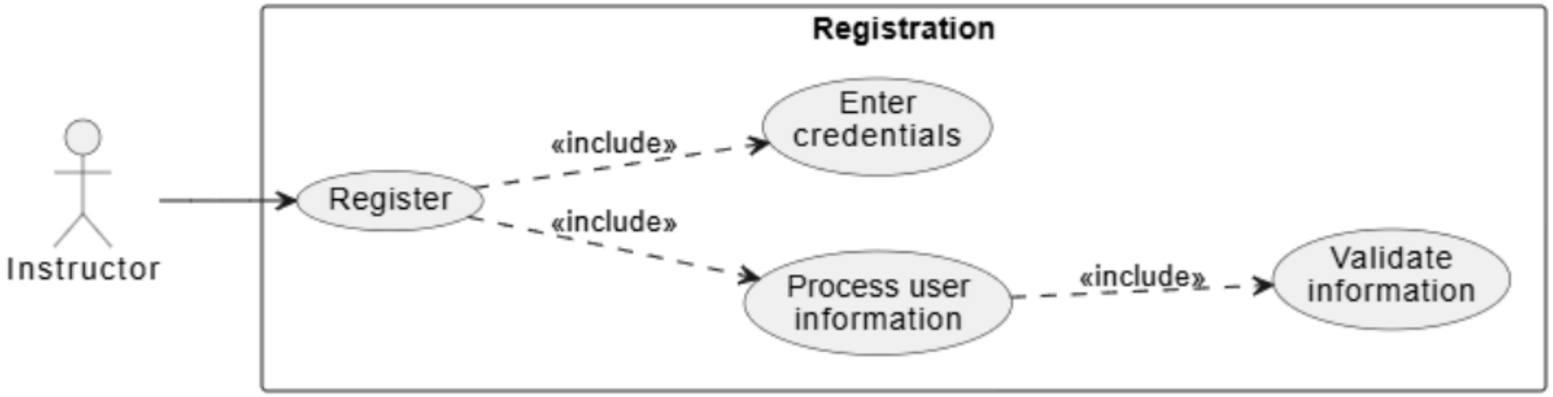

Module 1: Register

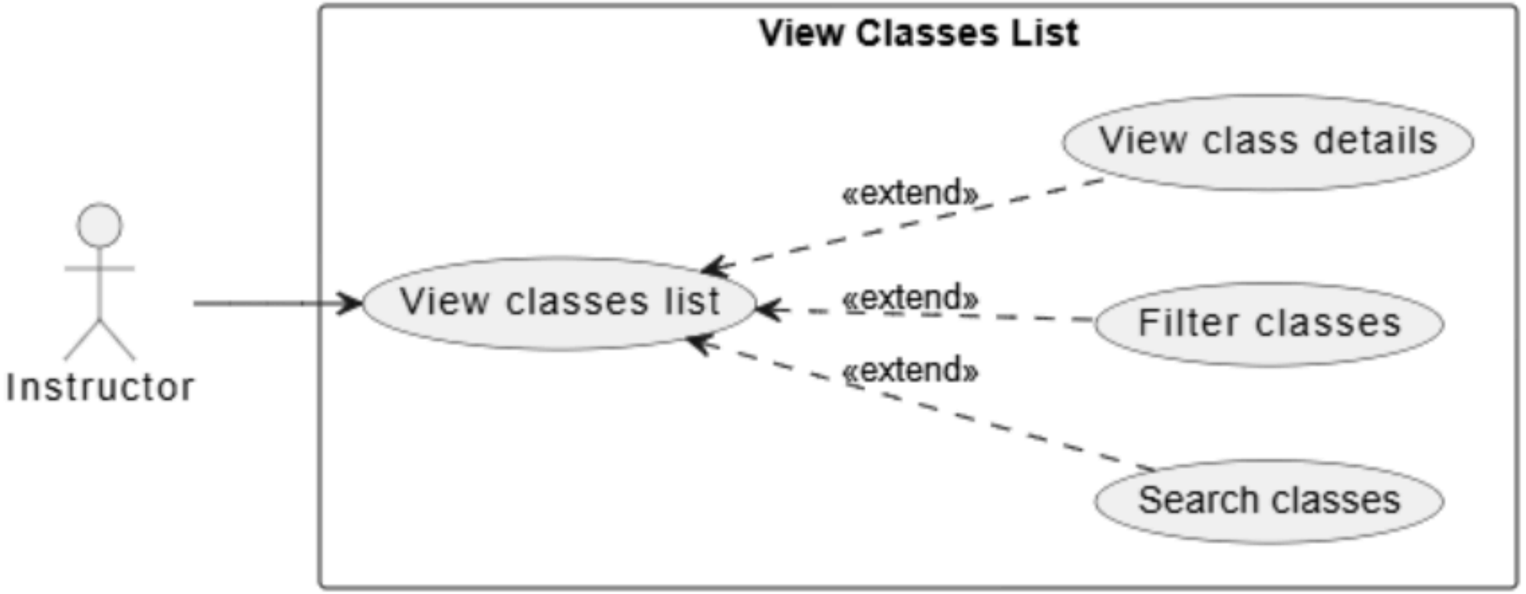

Module 2: View Classes List

7. Use Case Specification

User case specification include the following parts:

- Use case ID
- Use case name
- Description Actor(s)
- Priority Trigger
- Pre-Condition(s)
- Post-Condition(s)
- Basic Flow
- Alternative Flow
- Exception Flow
- Business Rules
- Non-Functional Requirement

📌 Please click here to see detailed user case spcification